A	AJ-117PMDC-CP

PROPRIETARY - NEXUS

ORDERING PART NUMBER: AJ-117PMDC

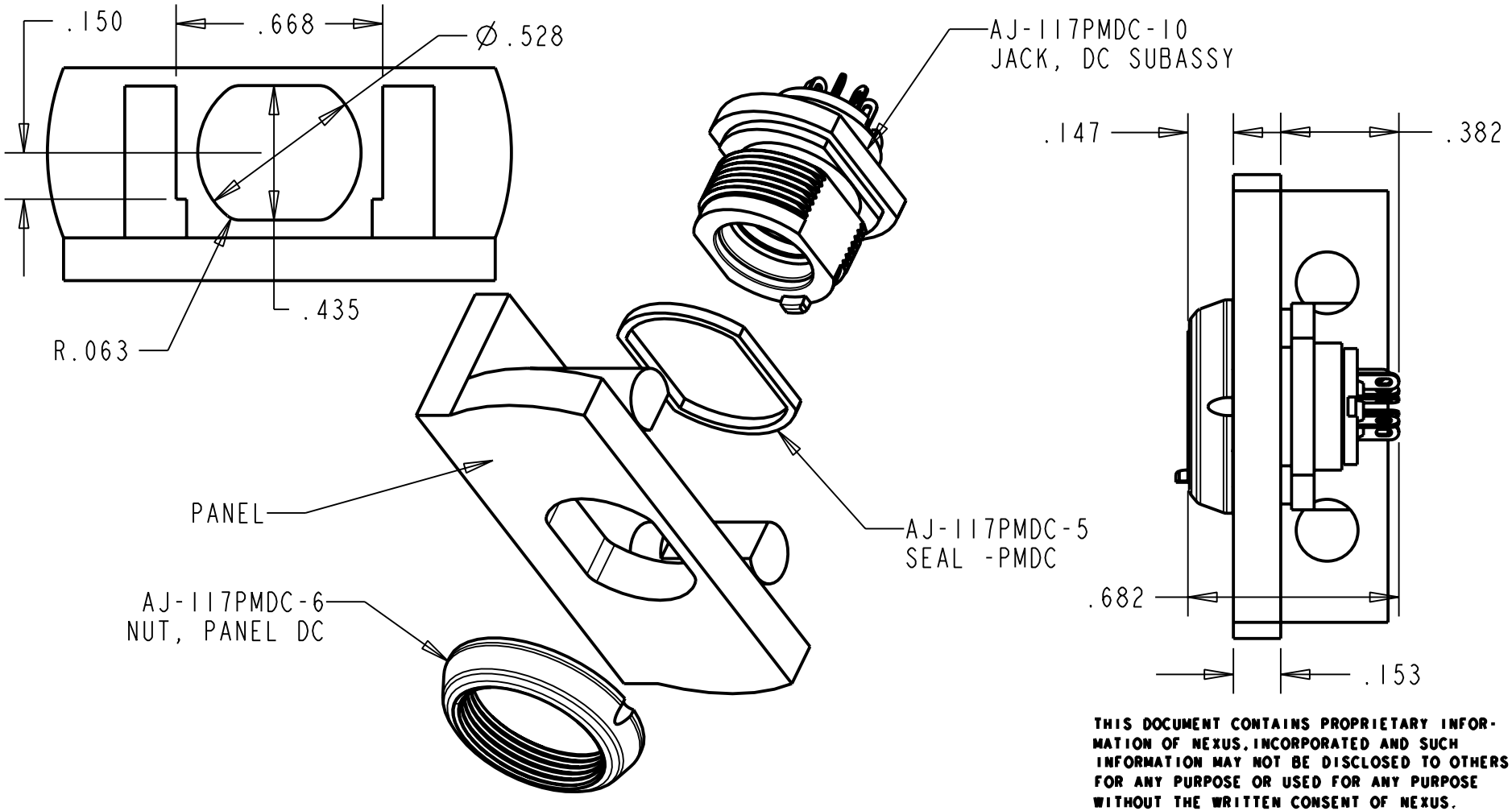

THIS DOCUMENT CONTAINS PROPRIETARY INFORMATION OF NEXUS, INCORPORATED AND SUCH INFORMATION MAY NOT BE DISCLOSED TO OTHERS FOR ANY PURPOSE OR USED FOR ANY PURPOSE WITHOUT THE WRITTEN CONSENT OF NEXUS.

LET.	REVISION	CN #	DATE	CHK.

DWN. BY LDE	DATE 07-Jul-05
CHECKED BY	DATE
APPR. BY	DATE

UNLESS OTHERWISE SPECIFIED DIMENSIONS ARE IN INCHES
TOLERANCES ON
.XX ——— .XXX ±.003 ANGLES ±.5°

MATERIAL

FINISH

WEIGHT ——— SCALE = 2.00 :1

TITLE
JACK-DC ASSEMBLY
ORDERING PART NUMBER: AJ-117PMDC

DO NOT SCALE DWG. SHEET 1 OF 1

NEXUS
STAMFORD, CONN

SIZE A DWG. NO. AJ-117PMDC-CP